MEDER electronic
Products for tomorrow...

Europe: +49 / 7731 8399 0 | Email: info@meder.com
USA: +1 / 508 295 0771 | Email: salesusa@meder.com
Asia: +852 / 2955 1682 | Email: salesasia@meder.com

Item No.:
9221350023
Item:
MK22-C-2

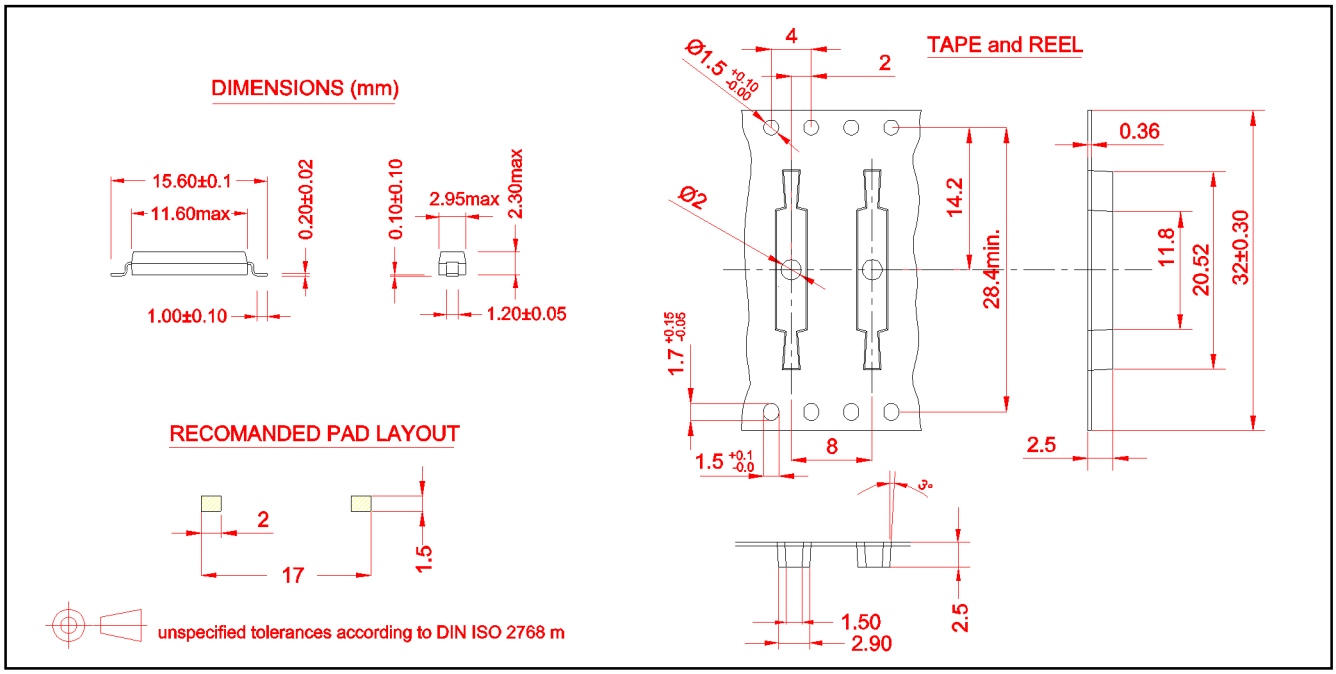

Magnetic properties	Conditions	Min	Typ	Max	Unit
Pull-In excitation (Reference value)	Reed switch unmodified measured in coil- "define operation"	15		20	AT
Test-Coil	Reed switch unmodified	KMS-02			

Contact data 35	Conditions	Min	Typ	Max	Unit
Contact - No.		35			
Contact - form		A - NO			
Contact rating	Any DC combination of V & A not to exceed their individual max.'s			20	W
Switching voltage	DC or Peak AC			200	VDC
Switching current	DC or Peak AC			1	A
Carry current	DC or Peak AC			1.25	mA
Contact resistance static	Measured with 40% overdrive Start Value			150	mOhm
Breakdown voltage (>=10AT)	according to IEC 255-5	320			VDC

Special Product Data	Conditions	Min	Typ	Max	Unit
Housing material		mineral-filled epoxy			
Case color		black			

Environmental data	Conditions	Min	Typ	Max	Unit
Shock	1/2 sine wave duration 11ms			50	g
Vibration	from 10 - 2000 Hz			20	g
Operating temperature		-40		130	°C
Storage temperature		-55		130	°C
Washability		fully sealed			
Soldering temperature	wave soldering max. 5 sec.			260	°C

General data	Conditions	Min	Typ	Max	Unit
total length - SMD			15.6		mm